# SUBMITTAL/TECHNICAL DATA SHEET

Quality Access Doors- ***FAST!***

SKU: **BA-CD-5080-F**

# DUCT DOOR

FOR FIBERGLASS DUCTS

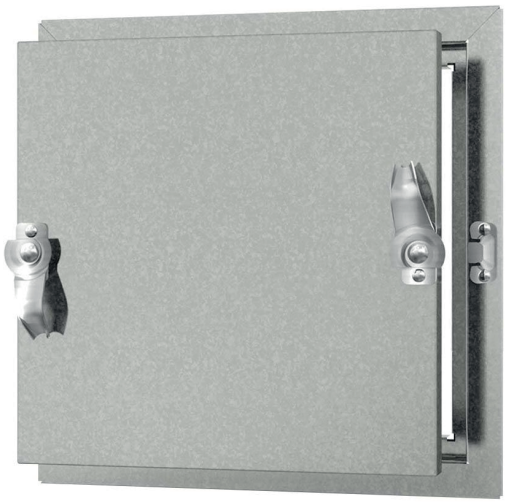

## APPLICATION

Economical access to fiberglass ducts

## FEATURES

- These doors are for use in low to medium pressure fiberglass ducts
- Double cam - no hinge, removable door panel

## OPTIONS

Aluminum, stainless steel

## SPECIFICATIONS

**MATERIAL:** Galvanized steel

**DOOR:** 24 gauge

**MOUNTING FRAME:** 24 gauge

**GASKETING:** 1/8" thick by 1/2" wide closed cell neoprene gasketing between door and frame. 1/16" thick by 11/2" adhesive bonded gasket between frame to duct

**INSULATION:** 2" of Fiberglass Insulation Compressed to 1" 7.7R Value

**LATCH:** Self tightening, hand operated cam latch

**For a complete list of options visit www.BestAccessDoors.com**

## DIMENSIONS AND APPEARANCE

>> CLICK TO VIEW ADDITIONAL DETAILS AND PRICING <<

| DOOR SIZE W x H INCHES | (MM) | LATCHES | WEIGHT LBS | KG |
|---|---|---|---|---|
| 6 x 6 | (152 x 152) | 2 | 1.00 | 0.5 |
| 8 x 8 | (203 x 203) | 2 | 1.25 | 0.6 |
| 10 x 10 | (254 x 254) | 2 | 2.00 | 0.9 |
| 12 x 12 | (304 x 304) | 2 | 2.50 | 1.1 |
| 14 x 14 | (356 x 356) | 4 | 3.25 | 1.5 |
| 16 x 16 | (406 x 406) | 4 | 4.00 | 1.8 |
| 18 x 18 | (457 x 457) | 4 | 5.50 | 2.5 |
| 24 x 24 | (610 x 610) | 4 | 9.00 | 4.1 |

Duct opening is normal door size-11/4" or (31 mm)
For detailed specifications see submittal sheet

**MANUFACTURED BY ACUDOR**

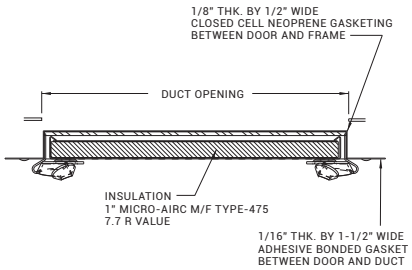


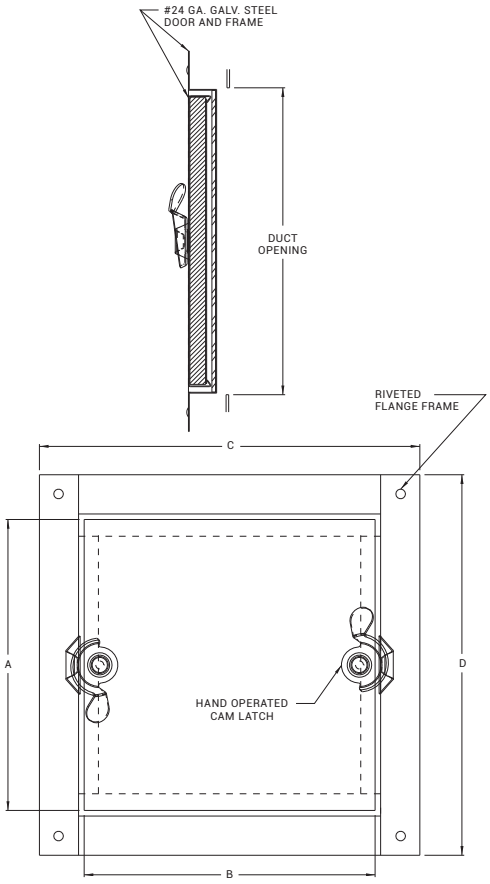


## PROJECT DATA

**Custom Sizes Available - Fast!**

| PROJECT NAME : | QTY | W | H | OPTIONS |
|---|---|---|---|---|
| ARCHITECT : | | | | |
| DEALER : | | | | |
| CONTRACTOR : | | | | |
| LOCATION : | SPECIAL INSTRUCTIONS : | | | |
| DATE : | | | | |
| TAGGING INSTRUCTIONS : | SUBMITTAL APPROVAL : (signature or stamp) | | | |

Scan or Click

To view Pricing and Additional Product Info.


TELEPHONE:
1-800-483-0823
FAX:
1-888-828-6021

228 PARK AVE. S. #76520
NEW YORK, NY, 10003

WEBSITE:
www.BestAccessDoors.com

E-MAIL:
info@bestaccessdoors.com

BEST ACCESS DOORS
Quality Access Doors- *FAST!*

TELEPHONE:
1-800-483-0823
FAX:
1-888-828-6021

228 PARK AVE. S. #76520
NEW YORK, NY, 10003

WEBSITE:
www.BestAccessDoors.com
E-MAIL:
info@bestaccessdoors.com

SUBMITTAL

# BA-CD-5080-F

# DUCT DOOR - NO HINGE FOR SHEET METAL DUCT

| NOMINAL DOOR SIZE | A | B | C | D | DUCT OPENING | LATCH |
|---|---|---|---|---|---|---|
| 6 x 6 (152 x 152) | 5.375 (137) | 5.375 (137) | 5.875 (225) | 5.875 (225) | 6 x 6 (152 x 152) | 2 |
| 8 x 8 (203 x 203) | 7.375 (187) | 7.375 (187) | 10.875 (276) | 10.875 (276) | 8 x 8 (203 x 203) | 2 |
| 10 x 10 (254 x 254) | 9.375 (238) | 9.375 (238) | 12.875 (327) | 12.875 (327) | 10 x 10 (254 x 254) | 2 |
| 12 x 12 (304 x 304) | 11.375 (289) | 11.375 (289) | 14.875 (378) | 14.875 (378) | 12 x 12 (304 x 304) | 2 |
| 14 x 14 (356 x 356) | 13.375 (340) | 13.375 (340) | 16.875 (429) | 16.875 (429) | 14 x 14 (356 x 356) | 4 |
| 16 x 16 (406 x 406) | 15.375 (391) | 15.375 (391) | 18.875 (479) | 18.875 (479) | 16 x 16 (406 x 406) | 4 |
| 18 x 18 (457 x 457) | 17.375 (441) | 17.375 (441) | 20.875 (530) | 20.875 (530) | 18 x 18 (457 x 457) | 4 |

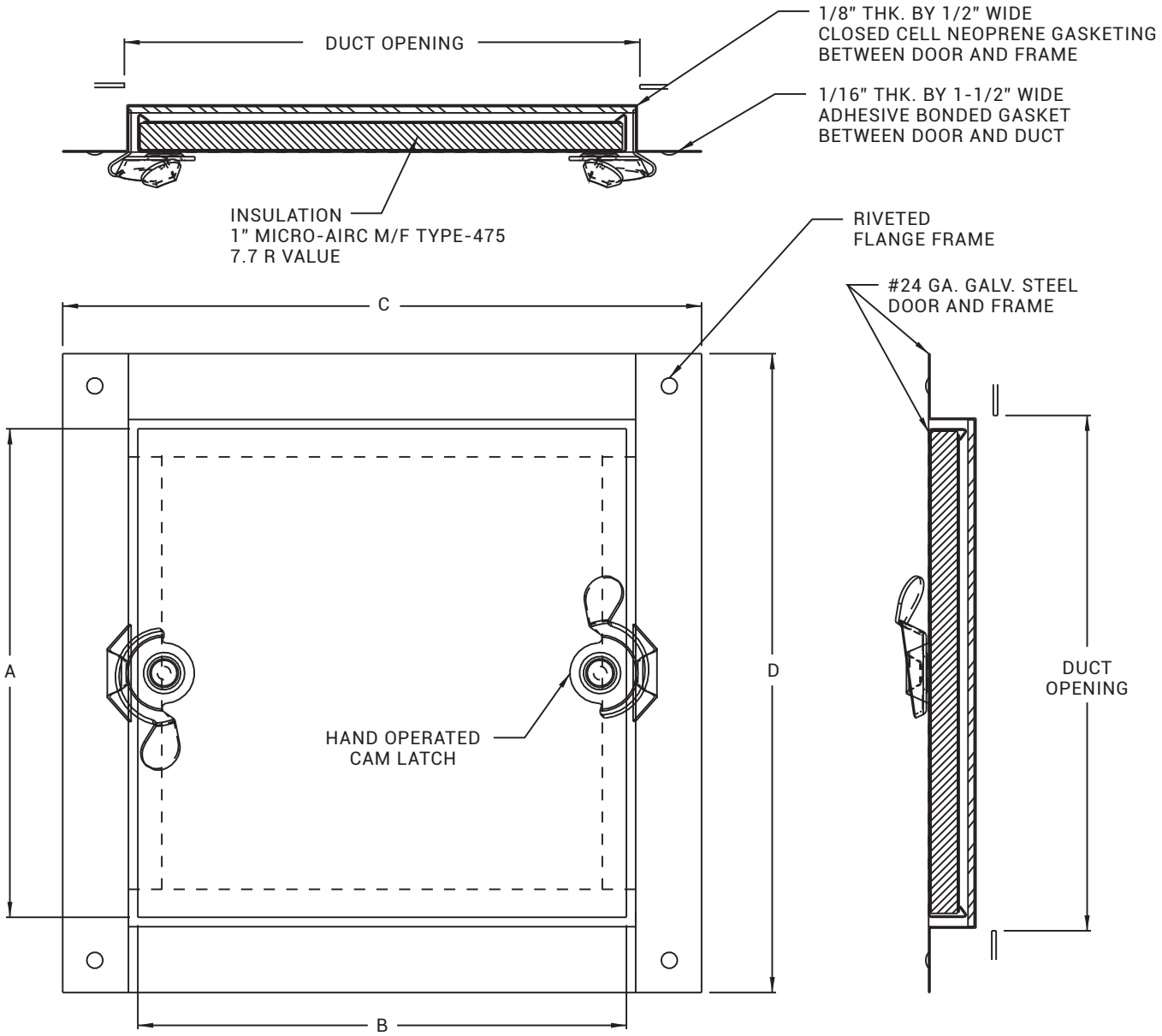


**MANUFACTURED BY ACUDOR**