SUBMITTAL/TECHNICAL DATA SHEET

BEST ACCESS DOORS

Quality Access Doors- *FAST!*

SKU: **BA-KSTDW**

SESAME DRYWALL CEILING HATCH

DESCRIPTION

The BA-KSTDW is designed for complete concealment in drywall ceilings.

Door panel on the sesame doors will open to a check position for safety and then release for a 90° opening and is removable.

SPECIFICATION

MATERIAL: 20 gauge cold rolled steel

LOCK/LATCH: Plastic grommets and be square head key wrench operated

HINGE: Concealed pivot rod

FINISH: Prime coat of rust inhibitive electrostatic powder, baked grey enamel

GASKETING: Flame retardant polyurethane

CONSTRUCTION

1. Frame shall be 20 gauge galvanized steel.

2. Door shall be 20 gauge galvanized steel and shall be lined with 3/8" mineral fiberboard.

3. Gasketing shall be flame retardant polyurethane.

4. Locks shall have plastic grommets and shall be square head key wrench operated.

5. Hinge shall be concealed pivot with a controlled action device (CAD), except for size 12" x 12".

For a complete list of options visit www.BestAccessDoors.com

DIMENSIONS AND APPEARANCE

>> CLICK TO VIEW ADDITIONAL DETAILS AND PRICING <<

STANDARD SIZES:

DOOR SIZE W" X H"	SHIP WEIGHT LBS.
12" X 12"	8.2 LBS
18" X 18"	16.7 LBS
24" X 24"	17.6 LBS
36" X 24"	44.4 LBS
48" X 24"	32.6 LBS

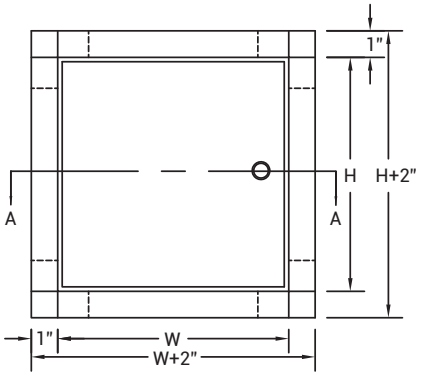

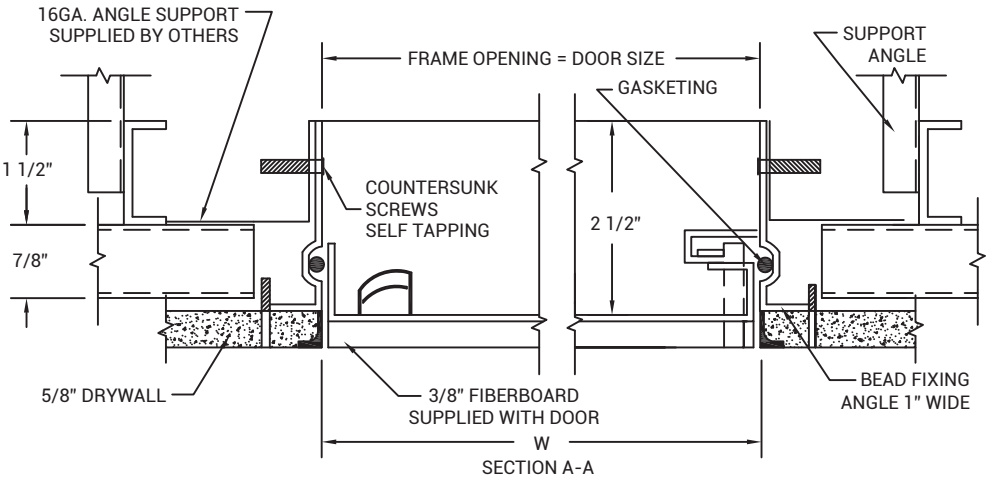

PROJECT DATA

Custom Sizes Available - Fast!

PROJECT NAME :	QTY	W	H	OPTIONS
ARCHITECT :				
DEALER :				
CONTRACTOR :				
LOCATION :	SPECIAL INSTRUCTIONS :			
DATE :				
TAGGING INSTRUCTIONS :	SUBMITTAL APPROVAL : (signature or stamp)			

Scan or Click

To view Pricing and Additional Product Info.

TELEPHONE:
1-800-483-0823
FAX:
1-888-828-6021

228 PARK AVE. S. #76520
NEW YORK, NY, 10003

WEBSITE:
www.BestAccessDoors.com

E-MAIL:
info@bestaccessdoors.com