SUBMITTAL/TECHNICAL DATA SHEET

Quality Access Doors- *FAST!*

SKU: **BA-MSD**

MEDIUM SECURITY ACCESS PANEL

STANDARD OPTIONS

MATERIAL: 14 gauge galvanneal steel

HINGE: Continuous piano hinge, located in the second dimension (height).

LOCK / LATCH: Key-operated cylinder cam latch with 2 keys per lock.

FINISH: High quality white powder coat primer.

PACKAGING: Individually wrapped, 1 door per box

OPTIONS AVAILABLE

LOCK / LATCH:
- Mortise deadbolt lock (-40, cylinder
- optional)
- Mortise slam latch (-85, cylinder
- optional)

HANDLE: Fixed 4" handle (-21), 4" handle-operated slam latch (-22)

MATERIAL: Stainless Steel (SS), cold-rolled steel (CR)

OTHER: Neoprene gasket (-60), Louvered door (-140)

For a complete list of options visit www.BestAccessDoors.com

Scan or Click

To view Pricing and Additional Product Info.

INSTALLATION

>> CLICK TO VIEW ADDITIONAL DETAILS AND PRICING <<

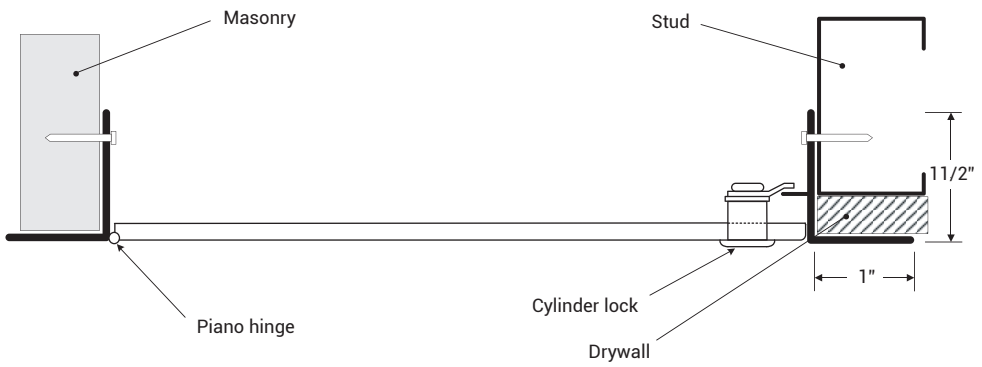

DIMENSIONS AND APPEARANCE

DOOR SIZE W x H INCHES	(MM)	NUMBER OF LOCKS	WEIGHT LBS	KG
12 x 12	(304 x 304)	1	6.8	3.1
16 x 16	(406 x 406)	1	10.3	4.7
18 x 18	(457 x 457)	1	12.5	5.7
24 x 24	(609 x 609)	1	19.9	9.0
24 x 30	(609x 762)	2	24.9	11.3
24 x 36	(609 x 914)	2	28.1	12.8
36 x 36	(914 x 914)	2	39.8	18.1
Rough wall opening door size + 1/4" or +6mm				

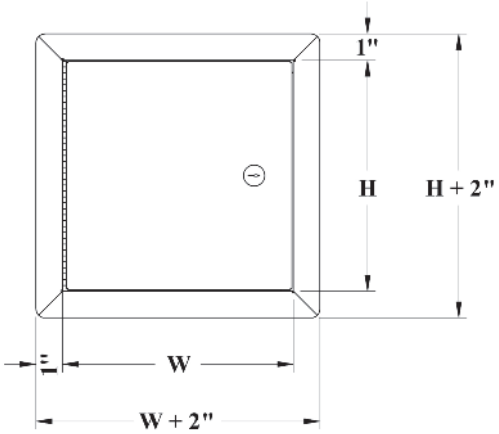

PROJECT DATA

Custom Sizes Available - Fast!

PROJECT NAME :	QTY	W	H	OPTIONS
ARCHITECT :				
DEALER :				
CONTRACTOR :				
LOCATION :	SPECIAL INSTRUCTIONS :			
DATE :				
TAGGING INSTRUCTIONS :	SUBMITTAL APPROVAL : (signature or stamp)			

LEED READY: THIS PRODUCT CONTRIBUTES TO LEED® CREDITS

TELEPHONE:
1-800-483-0823
FAX:
1-888-828-6021

228 PARK AVE. S. #76520
NEW YORK, NY, 10003

WEBSITE:
www.BestAccessDoors.com

E-MAIL:
info@bestaccessdoors.com