SUBMITTAL/TECHNICAL DATA SHEET

BEST ACCESS DOORS

Quality Access Doors- *FAST!*

SKU: **BA-TRH**

ROOF HATCH

STANDARD OPTIONS

COVER:
14 gauge galvanneal steel with 1" fiberglass insulation
HINGE:
Pin hinges, 2 gas cylinders, retaining bar handles.
Note: Hinge on second dimension (Height)
CURB:
14 gauge galvanneal steel with 1" fiber board insulation
SEAL:
"D" - foam adhesive gasket provides a flush and tight fit
FINISH:
High quality white powder coat primer
COMPONENTS:
- 2 gas cylinders
- Retaining bar handles

OPTIONS AVAILABLE

METERIAL: Aluminum

For a complete list of options visit www.BestAccessDoors.com

Scan or Click

To view Pricing and Additional Product Info.

LEED READY: THIS PRODUCT CONTRIBUTES TO LEED® CREDITS

INSTALLATION

>> CLICK TO VIEW ADDITIONAL DETAILS AND PRICING <<

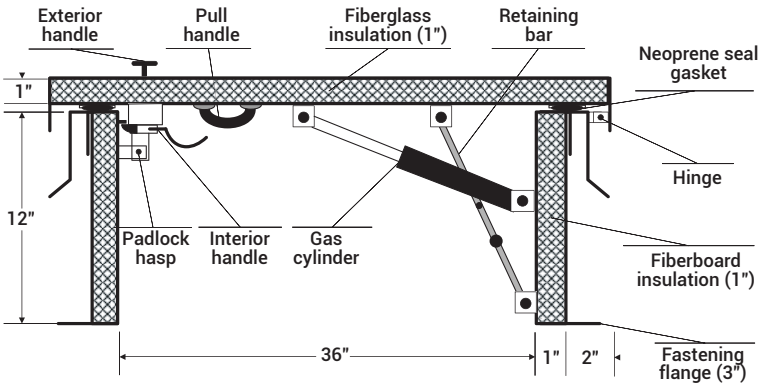

DIMENSIONS AND APPEARANCE

DOOR SIZE W x H INCHES	(MM)	EXTERIOR SIZE W x H INCHES	(MM)	NUMBER OF LOCKS	WEIGHT LBS	KG
36 x 30	(914 x 762)	**42 x 36**	(1067 x 614)	**1**	**178**	**81**
36 x 36	(914 x 914)	**42 x 42**	(1067 x 1067)	**1**	**188**	**85**

ROOF OPENING = SIZE OF ROOF HATCH

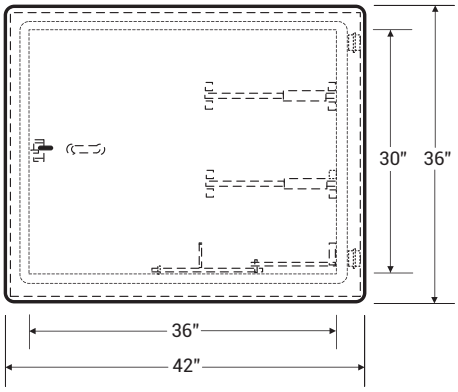

PROJECT DATA

Custom Sizes Available - Fast!

PROJECT NAME :	QTY	W	H	OPTIONS
ARCHITECT :				
DEALER :				
CONTRACTOR :				
LOCATION :	SPECIAL INSTRUCTIONS :			
DATE :				
TAGGING INSTRUCTIONS :	SUBMITTAL APPROVAL : (signature or stamp)			

TELEPHONE:
1-800-483-0823
FAX:
1-888-828-6021

228 PARK AVE. S. #76520
NEW YORK, NY, 10003

WEBSITE:
www.BestAccessDoors.com

E-MAIL:
info@bestaccessdoors.com